iDS-2CD7T46G2/VX3-I(H)S(Y)

4MP DeepinView Triple Fixed Lens Bullet Camera for Perimeter Protection

DeepinView series

DarkFighter 2.0



3D DNR | H.265+ | WDR | IP67

Hikvision has been dedicated to develop products with security since established.
Hikvision always follows security by design principle and has adopted many methods of security technologies into our product development lifecycle, including terminal security, data security, application security, network security, and privacy protection.
In the meantime, the security technologies used by Hikvision are all in compliance with local applicable laws and safety regulations. These security measures could enhance product's cyber security protection capability and protect your devices as well as your data from malicious cyber attacks.

- High quality imaging with 4MP and 2 × 2MP Resolution
- Excellent low-light performance via DarkFighter 2.0 Sharpmotion
- Efficient H.265+ compression technology to save bandwidth and storage
- Water and dust resistant (IP67), vandal proof (IK10) and corrosion resistant (NEMA 4X, optional)
- Dedicated Guanlan large scale AI model for perimeter protection, reduce false alarms by 90% compared to conventional AI cameras. Detect person and vehicle up to 120 m
- Red/blue alarm LED and audible warning
- Motorized tilt adjustment from -10° to 10° for easy installation
- TPM 2.0 for cyber security

▪ Function

Perimeter Protection

With embedded deep learning based target detection and classification algorithms, the camera carries out the duty of perimeter protection, monitoring the actions of line crossing, intrusion, region entrance, and region exiting. The algorithms greatly filter out the mistaken alarm caused by the interference of leafs, lights, animal, flag, etc.

▪ Specification

Camera	
Image Sensor	1/2.7" Progressive Scan CMOS
Max. Resolution	Channel 1: 2688 × 1520 Channel 2: 1920 × 1080 Channel 3: 1920 × 1080
Min. Illumination	Channel 1: Color: 0.005 Lux @ (F1.2, AGC ON),B/W:0.002 Lux @ (F1.2, AGC ON),0 Lux with IR; Channel 2: Color: 0.005 Lux @ (F1.2, AGC ON),B/W:0.0002 Lux @ (F1.2, AGC ON),0 Lux with IR; Channel 3: Color: 0.005 Lux @ (F1.2, AGC ON),B/W:0.0002 Lux @ (F1.2, AGC ON),0 Lux with IR
Shutter Time	1 s to 1/100,000 s
Lens	
Focal Length & FOV	4 mm, horizontal FOV 82.5°, vertical FOV 45.3°, diagonal FOV 96.1° 12 mm, horizontal FOV 25.4°, vertical FOV 14.4°, diagonal FOV 29.1° 25 mm, horizontal FOV 13.0°, vertical FOV 7.4°, diagonal FOV 14.9°
Iris Type	Fixed
Aperture	4 mm, F1.6 12 mm, F1.6 25 mm, F2.8
DORI	
DORI	4 mm, D: 77.6 m, O: 30.8 m, R: 15.5 m, I: 7.8 m 12 mm, D: 171 m, O: 67.9 m, R: 34.2 m, I: 17.1 m 25 mm, D: 331 m, O: 131.4 m, R: 66.2 m, I: 33.1 m
Illuminator	
Supplement Light Type	IR
Supplement Light Range	Up to 120 m
Smart Supplement Light	Yes
IR Wavelength	850 nm
Video	
Main Stream	Channel 1: 50 Hz: 25 fps (2688 × 1520, 2560 × 1440, 1920 × 1080, 1280 × 720) 60 Hz: 30 fps (2688 × 1520, 2560 × 1440, 1920 × 1080, 1280 × 720) Channel 2: 50 Hz: 25 fps (1920 × 1080, 1280 × 960, 1280 × 720) 60 Hz: 30 fps (1920 × 1080, 1280 × 960, 1280 × 720) Channel 3: 50 Hz: 25 fps (1920 × 1080, 1280 × 960, 1280 × 720) 60 Hz: 30 fps (1920 × 1080, 1280 × 960, 1280 × 720)
Sub-Stream	Channel 1 & Channel 2 & Channel 3: 50 Hz: 25 fps (704 × 576, 640 × 480) 60 Hz: 30 fps (704 × 480, 640 × 480)

Third Stream	Channel 1: 50 Hz: 25 fps (1920 × 1080, 1280 × 720, 704 × 576, 640 × 480) 60 Hz: 30 fps (1920 × 1080, 1280 × 720, 704 × 480, 640 × 480) Channel 2: 50 Hz: 25 fps (1920 × 1080, 1280 × 960, 1280 × 720, 704 × 576, 640 × 480) 60 Hz: 30 fps (1920 × 1080, 1280 × 960, 1280 × 720, 704 × 480, 640 × 480) Channel 3: 50 Hz: 25 fps (1920 × 1080, 1280 × 960, 1280 × 720, 704 × 576, 640 × 480) 60 Hz: 30 fps (1920 × 1080, 1280 × 960, 1280 × 720, 704 × 480, 640 × 480)
Video Compression	Main stream: H.265+/H.265/H.264+/H.264, Sub-stream: H.265/H.264/MJPEG, Third stream: H.265/H.264
Video Bit Rate	32 Kbps to 8 Mbps
H.264 Type	Baseline Profile,Main Profile,High Profile
H.265 Type	Main Profile
Scalable Video Coding (SVC)	H.264 and H.265 encoding
Region of Interest (ROI)	8 fixed regions for each stream
Bit Rate Control	CBR,VBR
Audio	
Audio Type	Mono sound
Environment Noise Filtering	Yes
Audio Sampling Rate	8 kHz/16 kHz/32 kHz/48 kHz
Audio Compression	G.711/G.722.1/G.726/MP2L2/PCM/MP3/AAC-LC
Audio Bit Rate	64 Kbps (G.711ulaw/G.711alaw)/16 Kbps (G.722.1)/16 Kbps (G.726)/32 to 192 Kbps (MP2L2)/8 to 320 Kbps (MP3)/16 to 64 Kbps (AAC-LC)
Network	
Protocols	TCP/IP, ICMP, HTTP, HTTPS, FTP, SFTP, SRTP, DHCP, DNS, DDNS, RTP, RTSP, RTCP, PPPoE, NTP,UPnP, SMTP, SNMP, IGMP, 802.1X, QoS, IPv4, IPv6, UDP, Bonjour, SSL/TLS, WebSocket, WebSockets
Simultaneous Live View	Up to 20 channels
API	Open Network Video Interface (Profile S, Profile G, Profile T, Profile M),ISAPI,SDK,ISUP
User/Host	Up to 32 users 3 user levels: administrator, operator, and user
Security	Password protection, complicated password, HTTPS encryption, 802.1X authentication (EAP-TLS, EAP-LEAP, EAP-MD5), watermark, IP address filter, basic and digest authentication for HTTP/HTTPS, WSSE and digest authentication for Open Network Video Interface, RTP/RTSP OVER HTTPS, Control Timeout Settings, Security Audit Log, TLS 1.2, TLS 1.3, TPM 2.0 (FIPS 140-2 level 2), AES128/256
Network Storage	NAS (NFS, SMB/CIFS),Auto Network Replenishment (ANR), Together with high-end Hikvision memory card, memory card encryption and health detection are supported.
Client	iVMS-4200,Hik-Connect,Hik-Central
Web Browser	Plug-in required live view: IE 10, IE 11, Plug-in free live view: Chrome 57.0+, Firefox 52.0+, Edge 89+, Safari 11+, Local service: Chrome 57.0+, Firefox 52.0+, Edge 89+

Image	
Image Parameters Switch	Yes
Image Settings	Saturation,brightness,contrast,sharpness,white balance,AGC,adjustable by client software or web browser
Day/Night Switch	Day,Night,Auto,Schedule,Alarm Trigger
Wide Dynamic Range (WDR)	Digital WDR
SNR	≥ 52 dB
Image Enhancement	BLC,HLC,3D DNR,Distortion Correction,Defog
Privacy Mask	8 programmable polygon privacy masks
Image Stabilization	EIS
Picture Overlay	LOGO picture can be overlaid on video with 128 × 128 24 bit bmp format.
Interface	
Ethernet Interface	1 RJ45 10 M/100 M self-adaptive Ethernet port
On-Board Storage	Built-in memory card slot, support microSD/microSDHC/microSDXC card, up to 1 TB
Built-in Microphone	Yes, 2 built-in microphones
Audio	2 input (line in), 1 output (line out), 3.5 mm connector.
Built-in Speaker	Yes, 1 built-in speaker
Alarm	2 inputs, 2 outputs (max. 24 VDC, 1 A)
RS-485	-Y: 1 RS-485 (Half duplex, HIKVISION, Pelco-P, Pelco-D, self-adaptive)
Reset Key	Yes
Power Output	-Y: 12 VDC, max. 50 mA
Event	
Basic Event	Motion detection (support alarm triggering by specified target types (human and vehicle)),video tampering alarm,exception (network disconnected, IP address conflict, illegal login, abnormal restart, HDD full, HDD error),video quality diagnosis
Smart Event	scene change detection,audio exception detection,defocus detection, unattended baggage detection,object removal detection,fast moving detection,parking detection,people gathering detection,loitering detection
Linkage	Upload to FTP/NAS/memory card,notify surveillance center,send email,trigger alarm output,trigger recording,trigger capture,audible warning
Deep Learning Function	
Perimeter Protection	Line crossing, intrusion, region entrance, region exiting Support alarm triggering by specified target types (human and vehicle) Dedicated Guanlan large scale AI model for perimeter protection, reduce false alarms by 90% compared to conventional AI cameras VCA range: The maximum detection distance can reach up to 120 meters *Result based on standard setup and test environment
Metadata	Intrusion detection,line crossing detection,region entrance detection,region exiting detection
General	
Power	12 VDC ± 20%, 2.1 A, max. 25.2 W PoE: IEEE 802.3at, Type 2, Class 4, 42.5 V to 57 V, 0.56 A to 0.45 A, max. 25.5 W
Material	Front cover: metal, body: metal, bracket: metal
Dimension	128.9 mm × 139.5 mm × 337 mm (5.1" × 5.5" × 13.2")
Package Dimension	423 mm × 200 mm × 198 mm (16.65" × 7.87" × 7.8")

Weight	With -Y: Approx. 2500 g (5.51 lb.), Without -Y: Approx. 2510g (5.53 lb.)
With Package Weight	With -Y: Approx. 3470 g (7.65 lb.), Without -Y: Approx. 3530 g (7.78 lb.)
Storage Conditions	-30 °C to 65 °C (-22 °F to 149 °F). Humidity 95% or less (non-condensing)
Startup and Operating Conditions	With -H: -40 °C to 65 °C (-40 °F to 149 °F). Humidity 95% or less (non-condensing), Without -H: -30 °C to 65 °C (-22 °F to 149 °F). Humidity 95% or less (non-condensing)
Language	33 languages: English, Russian, Estonian, Bulgarian, Hungarian, Greek, German, Italian, Czech, Slovak, French, Polish, Dutch, Portuguese, Spanish, Romanian, Danish, Swedish, Norwegian, Finnish, Croatian, Slovenian, Serbian, Turkish, Korean, Traditional Chinese, Thai, Vietnamese, Japanese, Latvian, Lithuanian, Portuguese (Brazil), Ukrainian
General Function	Heartbeat, mirror, password protection, one-key reset
Heater	-Y: Yes
Device Management	Supports adding alarm box (DS-FM2466) in the LAN to expand 6 additional input and 6 output alarm interfaces
Approval	
Environment	CE-RoHS: 2011/65/EU, WEEE: 2012/19/EU, Reach: Regulation (EC) No 1907/2006
EMC	CE-EMC: EN 55032:2015+A1:2020, EN 50130-4:2011+A1:2014, EN IEC 61000-3-2:2019+A1:2021, EN 61000-3-3:2013+A1:2019+A2:2021, RCM: AS/NZS CISPR 32: 2015, IC: ICES-003: Issue 7
Safety	CB: IEC 62368-1: 2014+A11, LOA: IEC/EN 60950-1, CE-LVD: EN 62368-1: 2014/A11: 2017
Protection	IP67: IEC 60529-2013, IK10: IEC 62262:2002
Anti-Corrosion Protection	-Y: NEMA 4X (NEMA 250-2018)
Other	PVC FREE

▪ Typical Application

Hikvision products are classified into three levels according to their anti-corrosion performance. Refer to the following description to choose for your using environment.

With -Y model: This model has MODERATE PROTECTION.
Without -Y model: This model has NO SPECIFIC PROTECTION.

Level	Description
Top-level protection	Hikvision products at this level are equipped for use in areas where professional anti-corrosion protection is a must. Typical application scenarios include coastlines, docks, chemical plants, and more.
Moderate protection	Hikvision products at this level are equipped for use in areas with moderate anti-corrosion demands. Typical application scenarios include coastal areas about 2 kilometers (1.24 miles) away from coastlines, as well as areas affected by acid rain.
No specific protection	Hikvision products at this level are equipped for use in

	areas where no specific anti-corrosion protection is needed.

▪ Available Model

iDS-2CD7T46G2/VX3-IS(4/12/25mm)

iDS-2CD7T46G2/VX3-IHSY(4/12/25mm)

▪ Dimension

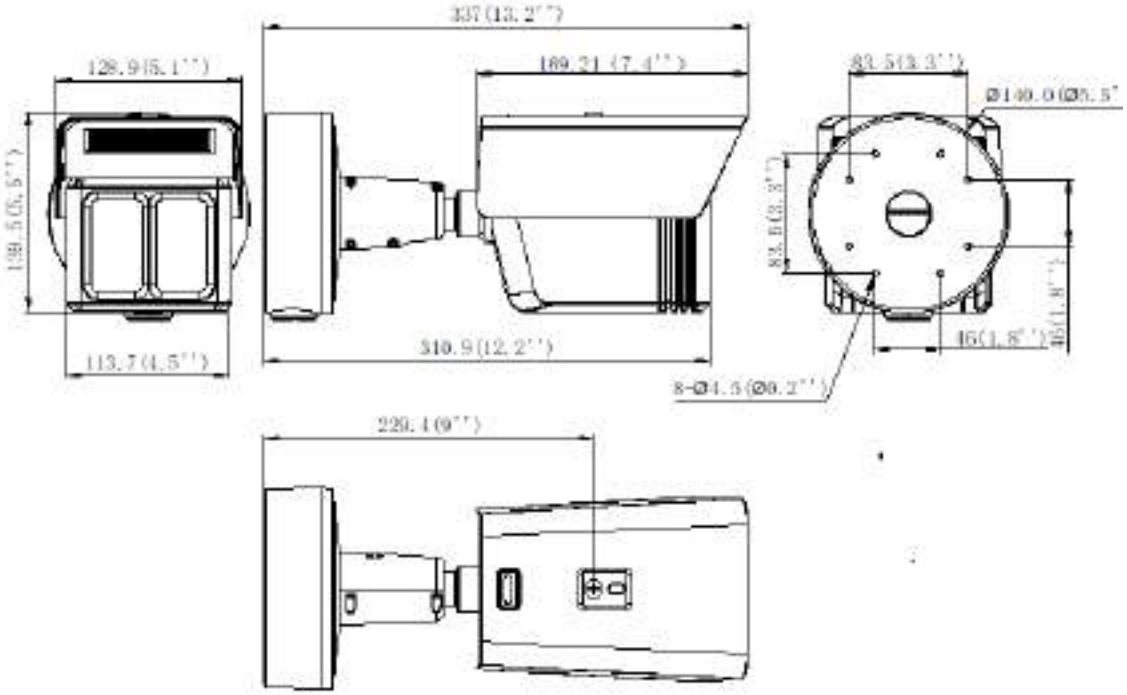

Unit:mm(inch)

With - Y

Camera Mounting Hole (mm)	Camera Mounting Hole (inch)
83.5×46(4×φ4.5)	3.3''×1.8''(4×φ0.2'')

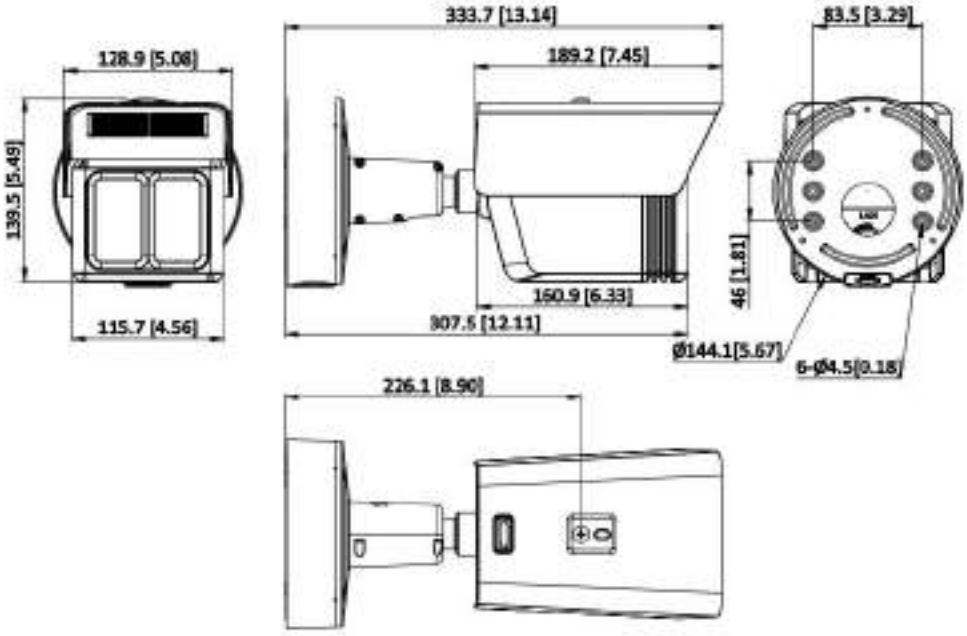

Unit:mm(inch)

Camera Mounting Hole (mm)	Camera Mounting Hole (inch)
83.5×46(4*ϕ4.5)	3.29"×1.81"(4*ϕ0.18")

▪ Accessory

▪ Optional

DS-1476ZJ-SUS	DS-1476ZJ-Y	DS-1475ZJ-SUS	DS-1275ZJ-S-SUS	DS-1475ZJ-Y
				

See Far, Go Further

www.hikvision.com
support@hikvision.com

© Hangzhou Hikvision Digital Technology Co., Ltd. Unless otherwise agreed, Hikvision makes no warranties, express or implied. We reserve the right to introduce modifications without notice.

HIKVISION