HM-TD2628T-7/G1/T3A
Bi-spectrum Thermography Network Bullet Camera



HM-TD2628T-7/G1/T3A Thermal & Optical Bi-spectrum Network Bullet Camera can be applied to warehouses, EV-charging station, waste & recycling plants, manufacturing workshops, etc. for fire prevention. The anomaly temperature alarm will be triggered once objects reach alarm threshold. Additionally, smoke detection will be auxiliary method as early warning to prevent fire.

Features

- 256 × 192 resolution, 12 μm, VOx UFPA, NETD ≤25 mK (25°C, F1.0)
- Ultra low fire and smoke false alarm with GUANLAN Large-Scale AI Model
- Temperature exception alarm for fire prevention, -20 °C to 650 °C (-4 °F to 1202 °F), ± Max (± 2°C, ± 2%)
- Support fire and smoke detection algorithm
- Support smoking detection algorithm
- Support forklift filter algorithm
- Support sun-light reflection filter algorithm
- Support smart hybrid light: white light, IR and smart mode
- Image processing technology: linear, histogram, self-adaptive thermal AGC mode, DDE, 3D DNR
- High quality detector with 10 years guarantee

▪ Specification

Thermal Module	
Image Sensor	Vanadium Oxide Uncooled Focal Plane Arrays
Resolution	256 × 192
Pixel Pitch	12 μm
Spectral Range	8 μm to 14 μm
NETD	≤25 mK (25°C, F1.0)
Focal Length	6.9mm
IFOV	1.74mrad
Field of View	24.9° × 18.7° (H × V)
Min. Focusing Distance	1 m
Aperture	F1.0
Digital Zoom	×2, ×4
Optical Module	
Image Sensor	1/2.7" Progressive Scan CMOS
Resolution	5MP, 2688 × 1944
Min. Illumination	0.0089Lux @(F1.6,AGC ON) ,0 Lux with IR
Shutter Speed	1 s to 1/100,000 s
Focal Length	8 mm
Field of View	39.4° × 22° (H × V)
Aperture (Range)	F1.6
WDR	120 dB
Image Effect	
Bi-spectrum Image Fusion	Display the details of optical channel on thermal channel
Picture in Picture	Display partial image of thermal channel on the full screen of optical channel
Target Coloration	Yes. Supported in white hot and black hot mode.
Illuminator	
Light Supplement	Hybrid (IR, White light or Smart mode)
IR Distance	Up to 60m
Audible and Visual Alarm	
White Light Range	Up to 60 m
Visual Alarm	Yes. White light alarm with adjustable flashing frequencies
Audio alarm	Yes, for two types of audible alarm (VCA and Temperature Exception) 2 preset voice alerts (one for each) 6 importable user-defined voice alerts (6 options shared in the two types)
Smart Function	
VCA	4 VCA rule types (line crossing, intrusion, region entrance, and region exiting), up to 8 VCA rules in total.
Temperature Measurement	3 temperature measurement rule types (point, area, line), 21 rules in total
Temperature Range	-20 °C to 650 °C (-4 °F to 1202 °F)

Temperature Accuracy	Max (±2°C, ±2 %)
Fire Detection	Dynamic fire detection, up to 10 fire points detectable
Smoking Detection	Up to 10 smoking points detected
Smoke Detection	Support smoke detection on optical channel
Video and Audio	
Main Stream	Thermal: 25 fps (1280 × 720, 704 × 576, 640 × 512, 320 × 240) Optical: 50 Hz: 25 fps (2688 × 1944, 2688 × 1520, 1920 × 1080, 1280 × 720) 60Hz: 30 fps (2688 × 1944, 2688 × 1520, 1920 × 1080, 1280 × 720)
Sub-stream	Thermal: 25 fps (704 × 576, 640 × 512, 320 × 240) Optical: 50 Hz: 25 fps (704 × 576, 352 × 288) 60 Hz: 30 fps (704 × 480, 352 × 240)
Video Compression	Main Stream: H.265/H.264 Sub-Stream: H.265/H.264/MJPEG
Audio Compression	G.722.1/G.711ulaw/G.711alaw/MP2L2/G.726/PCM
Video and Image	
Color Palettes	17 types (White hot, Black hot, Fusion 1, Rainbow, Fusion 2, Ironbow 1, Ironbow 2, Sepia, Color 1, Color 2, Ice fire, Rain, Red hot, Green hot, Dark blue, Winter, Summer)
Network	
Protocols	IPv4/IPv6,HTTP,HTTPS,802.1x,Qos,FTP,SMTP,UPnP,SNMP,DNS,DDNS,NTP,RTSP,RTCP,RTP,TCP,UDP,IGMP,ICMP,DHCP,PPPoE,Bonjour,SFTP,SRTP
Network Storage	MicroSD/SDHC/SDXC card (up to 512 G) local storage, NAS (NFS, SMB/CIFS), Auto Network Replenishment (ANR)
API	ISAPI, ISUP, HIKVISION SDK, and third-party management platform, Open Network Video Interface (Profile S, Profile G, Profile T, Profile M),OTAP
Simultaneous Live View	Up to 20 channels
User/Host level	Up to 32 users, 3 levels: Administrator, Operator, User
Security	User authentication (ID and Password), MAC address binding, HTTPS encryption, IEEE 802.1x(EAP-MD5, EAP-TLS), access control, IP address filtering
Client	iVMS-4200, Hik-Connect
Web Browser	Live view (plug-in allowed) : Internet Explorer 11 Live view (plug-in free) : Chrome 57.0 +, Firefox 52.0 + Local service : Chrome 57.0+, Firefox 52.0 +
Interface	
Alarm Input	2, alarm input (0-5 VDC)
Alarm Output	2, alarm output (alarm response actions configurable)
Alarm Action	SD recording/Relay output/Smart capture/FTP upload/Email linkage

Audio Input	1, 3.5 mm Mic in/Line in interface Line input: 2 - 2.4 V [p-p], output impedance: 1 KΩ ± 10%
Audio Output	Linear level, impedance: 600 Ω
Communication Interface	1, RJ45 10 M/100 M Self-adaptive Ethernet interface. 1, RS-485 interface (half duplex)
General	
Web Client Language	32 languages English, Russian, Estonian, Bulgarian, Hungarian, Greek, German, Italian, Czech, Slovak, French, Polish, Dutch, Portuguese, Spanish, Romanian, Danish, Swedish, Norwegian, Finnish, Croatian, Slovenian, Serbian, Turkish, Korean, Traditional Chinese, Thai, Vietnamese, Japanese, Latvian, Lithuanian, Portuguese (Brazil)
Power Supply	12 VDC ± 25%, 24 VDC ± 25% two-core terminal block PoE (802.3at, class 4)
Power Consumption	12 VDC ± 25%: 1A to 1.7 A, max. 16W PoE (802.3at, class 4): 42.5 V to 57 V, 0.28 A to 0.37 A, max. 16W
Working Temperature/Humidity	Temperature: -40°C to 65°C (-40°F to 149°F) Humidity: 95% or less
Protection Level	IP67 Standard, IK10 TVS 6000V lightning protection, surge protection, voltage transient protection
Dimensions	349.1 mm × 113 mm × 105mm
Weight	1710 g
Detection Range Table	
VCA Range for Humans	84 m
VCA Range for Vehicles	210 m
Approval	
EMC	CE-EMC (EN 55032: 2015, EN 61000-3-2:2019, EN 61000-3-3: 2013+A1:2019, EN50130-4: 2011+A1: 2014); RCM (AS/NZS CISPR 32: 2015); IC (ICES-003: Issue 7) KC (KSC9832: 2019; KSC9835: 2019)
Safety	CB: IEC 62368-1: 2014+A11; CE-LVD: EN 62368-1: 2014/A11: 2017; BIS: IS 13252 (Part 1): 2010/ IEC 60950-1: 2005 LOA: SANS/IEC 60950-1
Environment	CE-RoHS: 2011/65/EU, WEEE: 2012/19/EU, Reach: Regulation(EC) No 1907/2006
Protection	IP67: IEC 60529-2013 IK10: IEC 62262-2002

▪ Range Table

**The table is only for reference and the performance may vary according to different environment.*

VCA Range (Humans: 1.8 × 0.5 m)	VCA Range (Vehicles: 1.4 × 4.0 m)	Temperature Measurement (Object: 1 × 1 m)	Temperature Measurement (Object: 0.2 × 0.2 m)	Fire Detection (Object Size: 0.5 x 0.5m))	Smoking Detection	Smoke Detection (Object Size: 0.5 x 0.5m))
84m	207 m	116.7m	23.3m	48m	10.35m	24m

▪ DORI

**The table is only for reference and the performance may vary according to different environment.*
**The optimal human detection, recognition, and identification distances are calculated according to Johnson's Criteria.*
Detection Range: In order to distinguish an object from the background, the object must be covered by 1.5 or more pixels.
Recognition Range: In order to classify the object (animal, human, vehicle, etc.), the object must be covered by 6 or more pixels.
Identification Range: In order to identify the object and describe it in details, the object must be covered by 12 or more pixels.

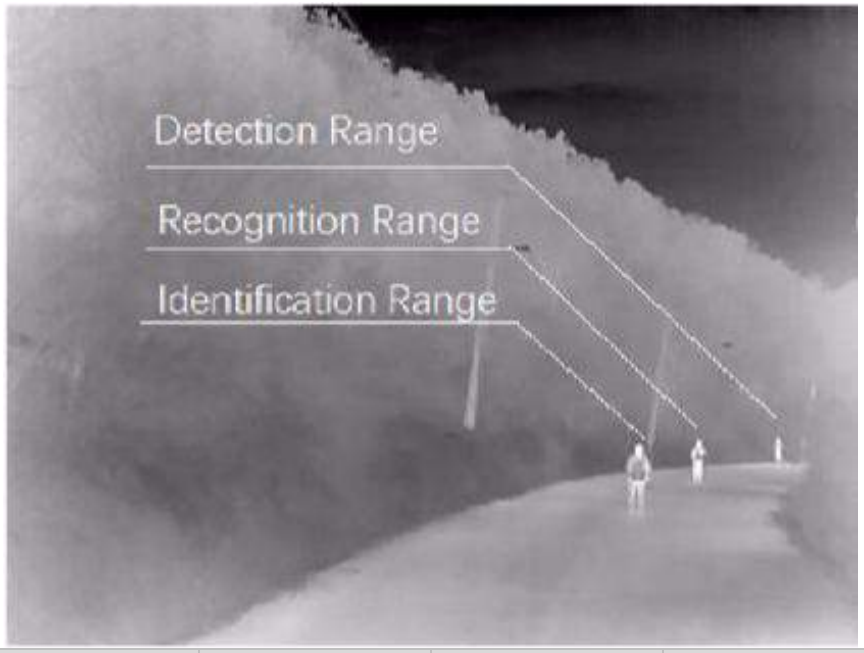

Detection Range (Humans: 1.8 × 0.5 m)	Detection Range (Vehicles: 1.4 × 4.0 m)	Recognition Range (Humans: 1.8 × 0.5 m)	Recognition Range (Vehicles: 1.4 × 4.0 m)	Identification Range (Humans: 1.8 × 0.5 m)	Identification Range (Vehicles: 1.4 × 4.0 m)
287m	881m	72m	220m	36m	110m

▪ Typical Application

HIKMICRO products are classified into three levels according to their anti-corrosion performance. Refer to the following description to choose for your using environment.

No products could be used under HYDROGEN FLUORIDE environment. This model has No Specific PROTECTION.

Level	Description
Top-level Protection	HIKMICRO products at this level are equipped for use in areas where professional anti-corrosion protection is a must. Usually it is used in salt-spray and sulfur dioxide

	(with a concentration volume ratio of less than 0.67%) environment, such as chemical plants and coastal lines.
Moderate Protection	HIKMICRO products at this level are equipped for use in areas with moderate anti-corrosion demands. Typical application scenarios include coastal areas about 2 kilometers (1.24 miles) away from coastlines, as well as areas affected by acid rain.
No Specific Protection	HIKMICRO products at this level are equipped for use in areas where no specific anti-corrosion protection is needed.

▪ Available Model

HM-TD2628T-7/G1/T3A

▪ Dimension

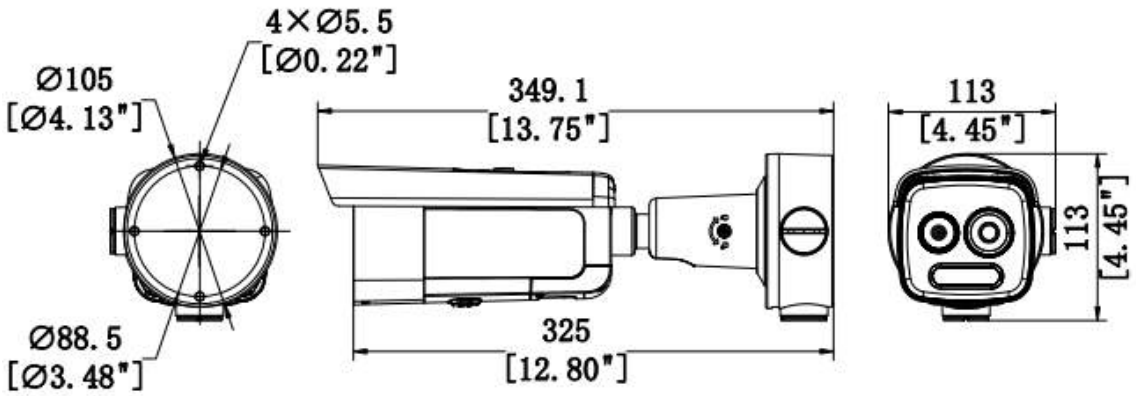

▪ Accessory

▪ Included

DS-1260ZJ
Junction box



▪ Optional

DS-1276ZJ-SUS
Corner mount



DS-1275ZJ-S-SUS
Vertical pole mount



▪ Note

COMPLIANCE NOTICE: The thermal series products might be subject to export controls in various countries or regions, including without limitation, the United States, European Union, United Kingdom and/or other member countries of the Wassenaar Arrangement. Please consult your professional legal or compliance expert or local government authorities for any necessary export license requirements if you intend to transfer, export, re-export the thermal series products between different countries.

HIKMICRO

Building A1, No. 299, Qiushi Road, Tonglu Economic Development Zone, Tonglu County, Hangzhou, Zhejiang
©Hangzhou HikMicro Sensing Technology Co., Ltd. | Data subject to change without notice.