DS-2CFWQ6-D
6MP Wi-Fi 6 Dual-lens Indoor PT Camera





- 2K+2K Higher Definition Helps See More Details
- Support Smart Tracking
- Support One-tap Privacy Mode
- Support Wi-Fi 6
- Support Human and Vehicle Detection
- Provide real-time security via built-in two-way audio
- Support Smart Hybrid Light

▪ Specification

Camera	
Image Sensor	1/2.8" Progressive Scan CMOS
Max. Resolution	2304 × 1296
Min. Illumination	Color: 0.01 Lux @ (F2.2, AGC ON), B/W: 0 Lux with IR
Shutter Time	1/25 s to 1/100,000 s
Day & Night	IR cut filter
Angle Adjustment	Pan: 0° to 345°, tilt: 15° to 85°
Lens	
Lens Type	Fixed focal lens, 2.8 and 4 mm
Focal Length & FOV	2.8 mm, horizontal FOV 106.4°, vertical FOV 58.4°, diagonal FOV 126.6° 4 mm, horizontal FOV 84°, vertical FOV 45.5°, diagonal FOV 101.1°
Lens Mount	M12
Iris Type	Fixed
Aperture	F2.2
Depth of Field	2.8 mm: 0.9 m to ∞ 4 mm: 1 m to ∞
DORI	
DORI	2.8 mm, D: 50 m, O: 20 m, R: 10 m, I: 5 m 4 mm, D: 63 m, O: 25 m, R: 12 m, I: 6 m
Illuminator	
Supplement Light Type	IR, White Light
Supplement Light Range	Channel 1: up to 10 m, Channel 2: up to 10 m
Smart Supplement Light	Yes
IR Wavelength	850 nm
Video	
Main Stream	50 Hz: 20 fps (2304 × 1296, 1920 × 1080, 1280 × 720) 60 Hz: 20 fps (2304 × 1296, 1920 × 1080, 1280 × 720)
Sub-Stream	50 Hz: 20 fps (768 × 432) 60 Hz: 20 fps (768 × 432)
Video Compression	Main stream: H.265, Sub-stream: H.265
Video Bit Rate	32 Kbps to 2 Mbps
H.265 Type	Main Profile
Bit Rate Control	CBR, VBR
Audio	
Audio Type	Mono sound
Audio Compression	G.711(ulaw)/ AAC-LC
Audio Bit Rate	64 Kbps (G.711ulaw)/16 to 64 Kbps (AAC-LC)
Audio Sampling Rate	8 kHz/16 kHz
Environment Noise Filtering	Yes
Network	
Security	Password protection, complicated password, watermark, basic and digest authentication for HTTP, security audit log, host authentication (MAC address)
Client	Hik-Connect

Simultaneous Live View	Up to 10 channels
Protocols	TCP/IP, ICMP, DHCP, DNS, HTTP, RTP, RTSP, NTP, IGMP, UDP, QoS
Wi-Fi	
Encryption Mode	WPA-PSK/WPA2-PSK
Wi-Fi Protocol	IEEE802.11b, IEEE802.11g, IEEE802.11n, IEEE802.11ax
Frequency Range	2.4 GHz to 2.4835 GHz
Channel Bandwidth	20/40 MHz
Modulation	802.11b: DBPSK, DQPSK, CCK 802.11g: BPSK, QPSK, 16QAM, 64QAM 802.11n: BPSK, QPSK, 16QAM, 64QAM 802.11ax: BPSK, QPSK, 16QAM, 64QAM, 256QAM
Transfer Rate	11b: up to 11 Mbps 11n: up to 150 Mbps 11g: up to 54 Mbps 11ax: up to 114 Mbps
Wireless Range	Up to 50 m (The performance varies based on actual environment)
Image	
Wide Dynamic Range (WDR)	Digital WDR
SNR	≥ 52 dB
Day/Night Switch	Day, Night, Auto, Schedule
Image Enhancement	BLC, HLC, 3D DNR
Image Settings	Saturation, brightness, contrast, sharpness, gain, white balance, adjustable by client software or web browser
Privacy Mask	4 programmable polygon privacy masks, *Support one-click physical privacy mask.
Interface	
Audio	1 built-in microphone 1 built-in speaker
Reset Key	Yes
Event	
Basic Event	Motion detection (support alarm triggering by specified target types (human and vehicle))
Linkage	Notify surveillance center, audible warning
General	
Power	5 VDC ± 5%, 1.8 A, Type-C
Material	Plastics
Dimension	Ø124.17 mm × 129 mm (Ø4.9" × 5.1")
Package Dimension	165 mm × 153 mm × 139 mm (6.5" × 6.0" × 5.5")
Weight	Approx. 330 g (0.7 lb.)
With Package Weight	Approx. 740 g (1.6 lb.)
Storage Conditions	-10 °C to 40 °C (14 °F to 104 °F). Humidity 95% or less (non-condensing)
Startup and Operating Conditions	-10 °C to 40 °C (14 °F to 104 °F). Humidity 95% or less (non-condensing)
General Function	Heartbeat, mirror, password protection, anti-banding

Approval	
RF	CE-RED: EN 301489-1 V2.1.1(BT or 2.4G); EN 301489-17 V3.1.1 (BT or 2.4G); EN 300328 V2.1.1 (BT or 2.4G); EN 62311:2008 (BT or 2.4G)
EMC	CE-EMC: EN 55032:2015+A1:2020, EN 50130-4:2011+A1:2014, EN IEC 61000-3-2:2019+A1:2021, EN 61000-3-3:2013+A1:2019+A2:2021
Safety	CB: IEC 62368-1:2014+A11, CE-LVD: EN 62368-1:2014/A11:2017
Environment	CE-RoHS: 2011/65/EU, WEEE: 2012/19/EU, Reach: Regulation (EC) No 1907/2006

▪ Available Model

DS-2CFWQ6-D(2.8+4mm)

▪ Dimension

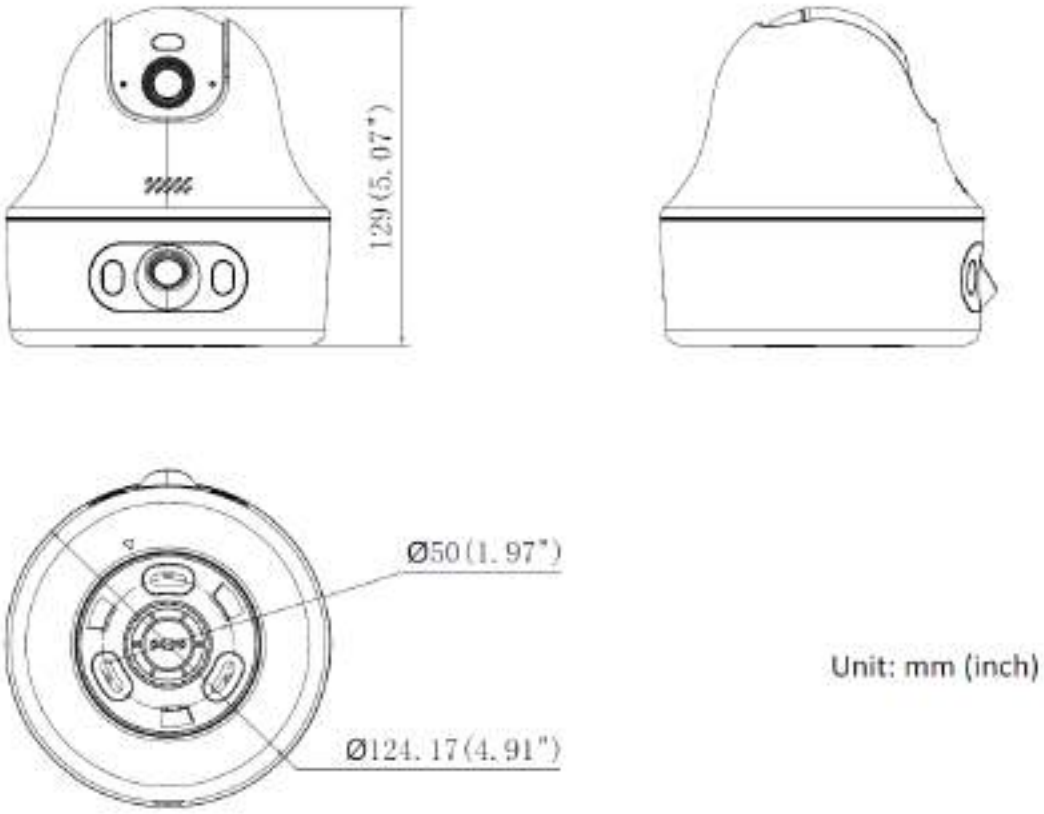

See Far, Go Further

www.hikvision.com
support@hikvision.com

© Hangzhou Hikvision Digital Technology Co., Ltd. Unless otherwise agreed, Hikvision makes no warranties, express or implied. We reserve the right to introduce modifications without notice.

HIKVISION